Wellington City Council
21 April 2021

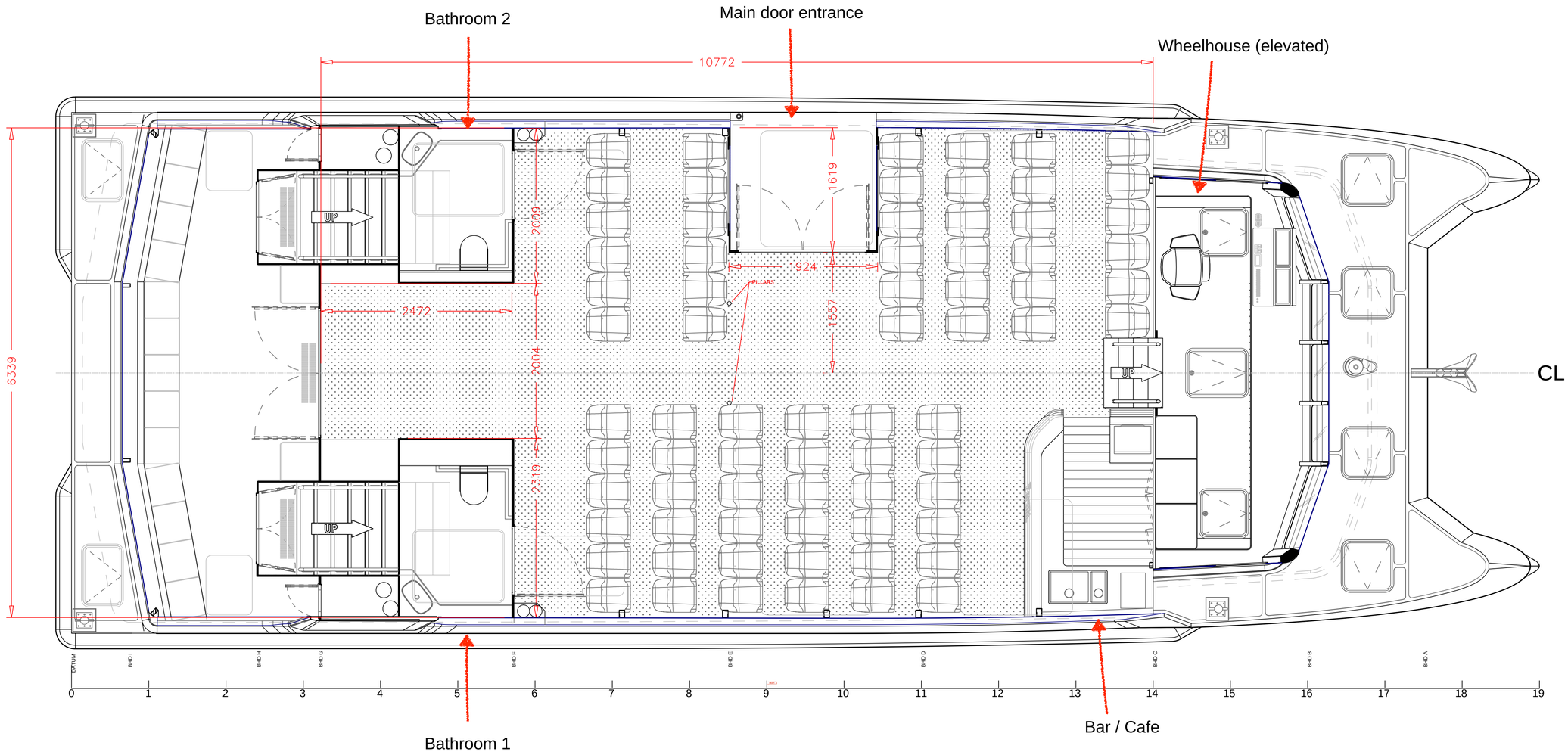

MAIN DECK DIMENSIONS FOR CARPET

MAIN DECK GA

Wellington City Council
21 April 2021

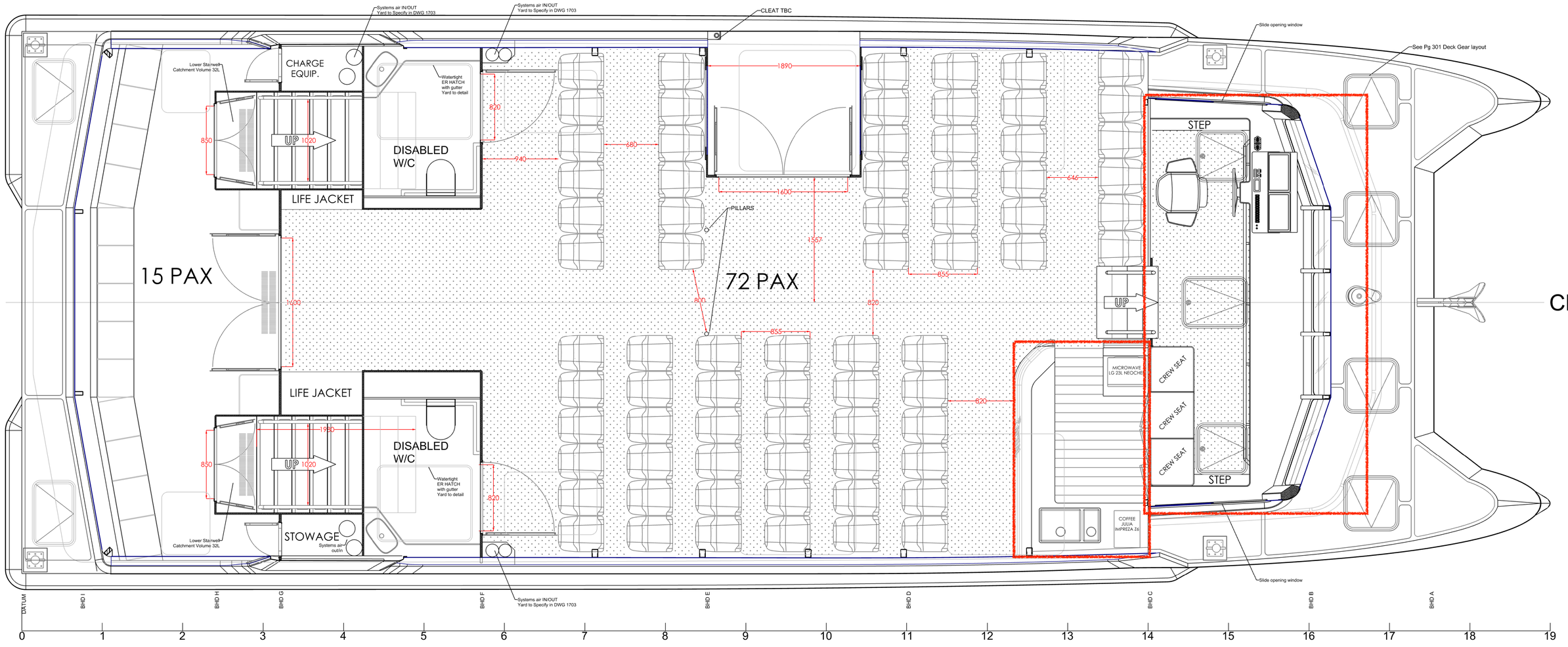

ISSUE	Date	Drawn	Checked	Approved	COMMENTS
P.1	12-12-2018	W.B.	K.C.	K.C.	Hull model version 0.22C - layout adjusted
P.2	01-02-2019	W.B.	K.C.	K.C.	Hull model version 0.30a - Hull adjusted
P.3	15-07-2019	W.B.	K.C.	K.C.	Hull model version 0.30a - GA Finalised
A	23-06-2020	W.B.	K.C.	K.C.	GA and systems finalised

ISSUED FOR DESIGN APPROVAL

SSC MARINE LTD
5/2 Emily Place, Auckland, 1010
New Zealand
Email: enquiries@sscmarine.com
Web: sscmarine.com

sscmarine
Designers of high efficiency vessels

Client:	EAST BY WEST
Project:	WELLINGTON FERRY
Title:	GENERAL ARRANGEMENT - main deck
Drawing Number:	SSC - 005/1 - 0501-2
Sheet:	2 of 3
Scale at ISO A1:	1 : 25
Date:	23 - 06 - 2020

This drawing is confidential. It may not be copied or its contents disclosed to third parties without the written consent of SSC Marine Ltd. and may only be used for the construction of vessels for which design fees and/or royalty payments have been made in accordance with the design contract. All copyrights and intellectual rights remain with SSC Marine Ltd

EXTERIOR PROFILE

Wellington City Council
21 April 2021

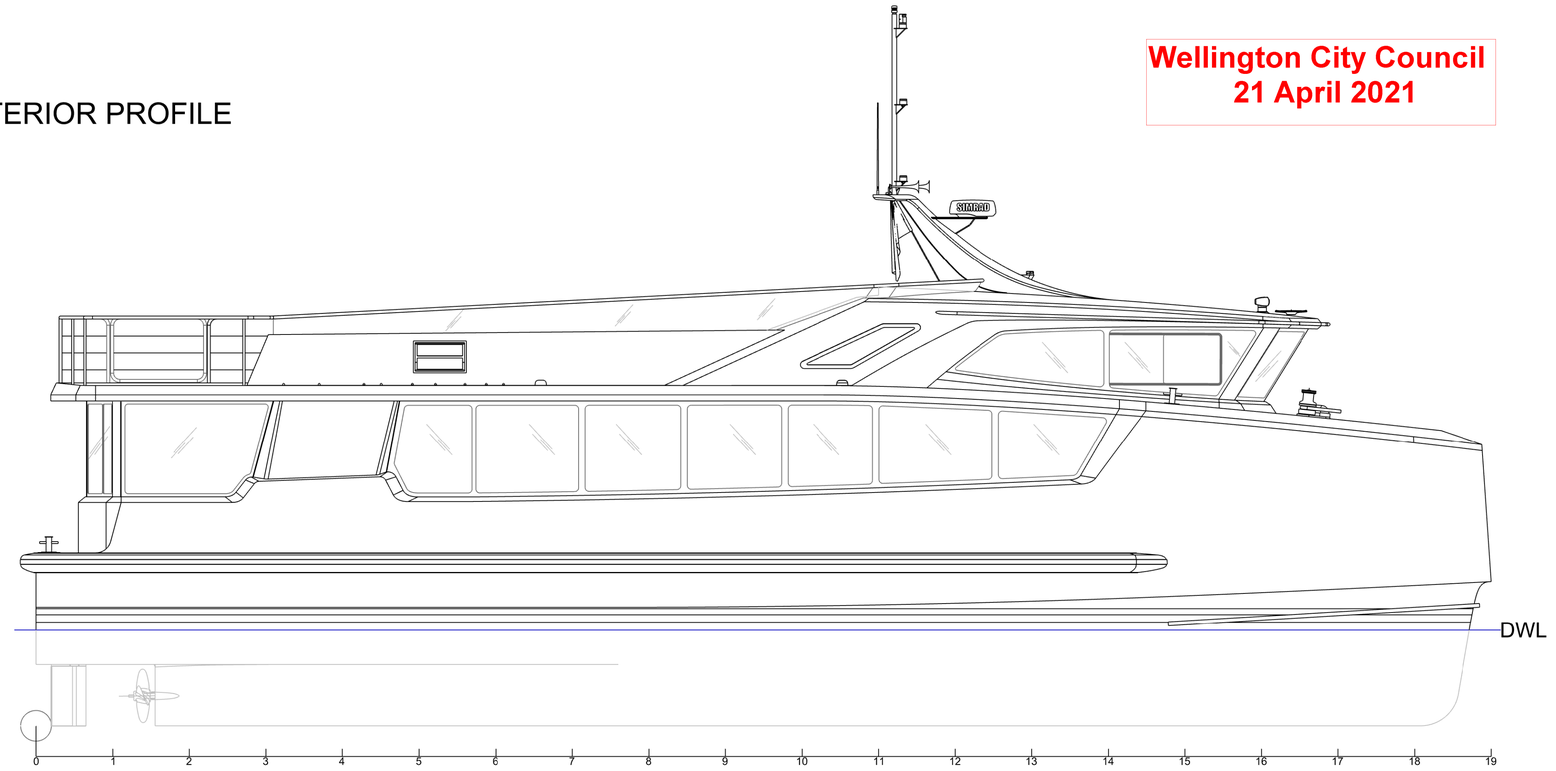

FWD VIEW

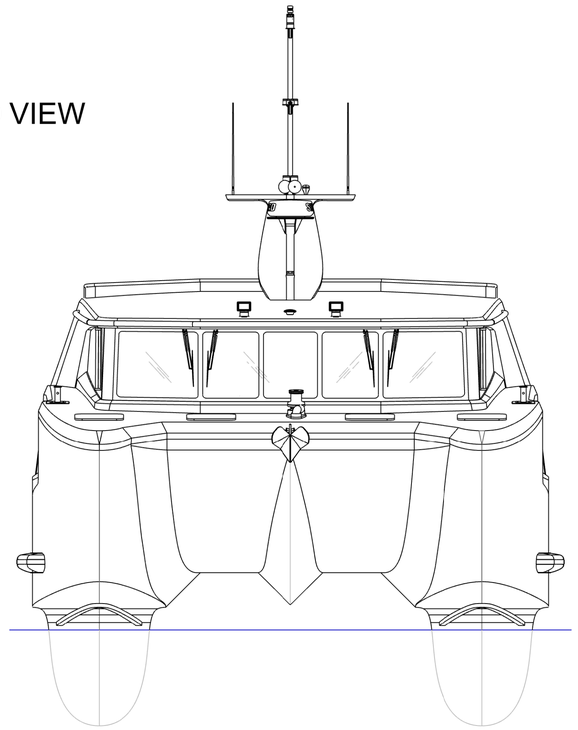

EXTERIOR PLAN

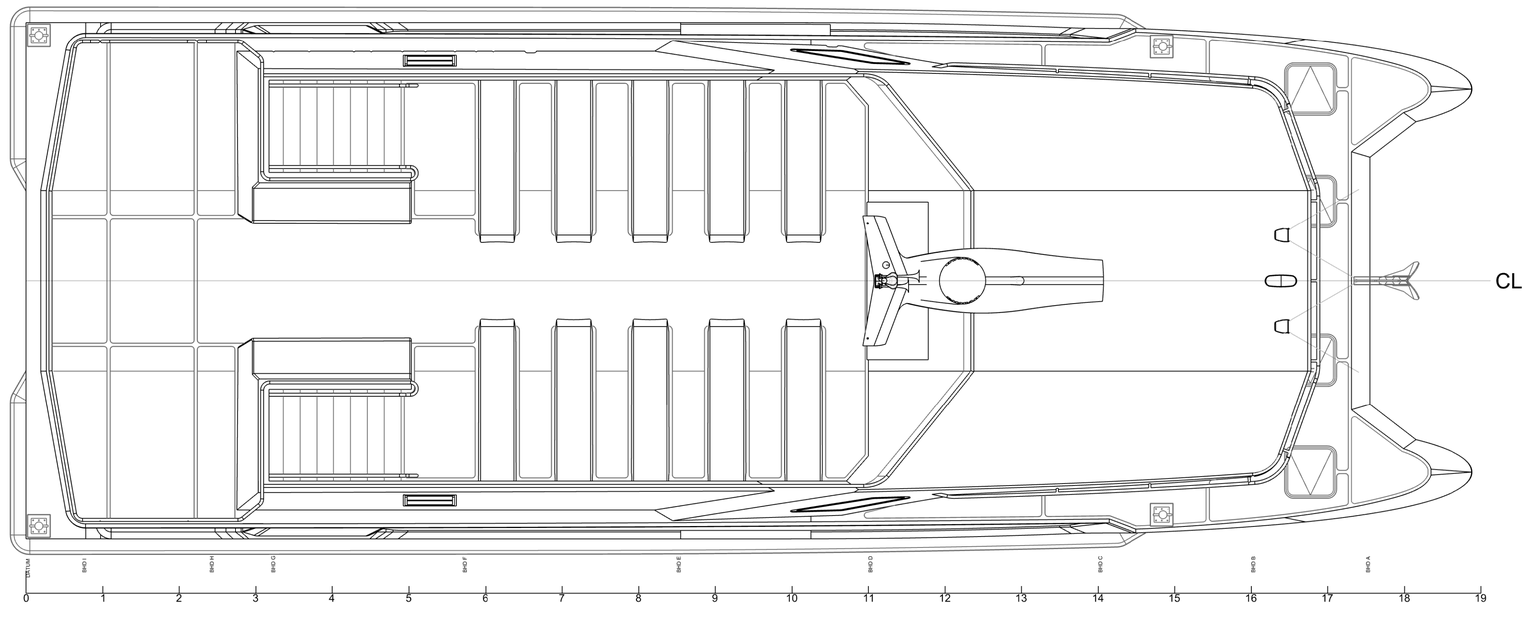

SPECIFICIATIONS

LOA (moulded) : 19m
Bmax (fender) : 7.14m
Bmax (moulded) : 6.74m
Draft at DWL : 1.25m
Air Draft at DWL : 5.6m
Speed(FLD) 85% : 20 knt
Displacement at DWL : 37.5t
Pax (Upper DK) : 48
Pax (Lower DK) : 87
Crew : 3 (master, mate, deckhand)

ISSUE	Date	Drawn	Checked	Approved	COMMENTS
P.1	12-12-2018	W.B.	K.C.	K.C.	Hull model version 0.22C - layout adjusted
P.2	01-02-2019	W.B.	K.C.	K.C.	Hull model version 0.30a - Hull adjusted
P.3	15-07-2019	W.B.	K.C.	K.C.	Hull model version 0.30a - GA Finalised
A	23-06-2020	W.B.	K.C.	K.C.	GA and systems finalised

ISSUED FOR DESIGN APPROVAL

SSC MARINE LTD
5/2 Emily Place, Auckland, 1010
New Zealand
Email: enquiries@sscmarine.com
Web: sscmarine.com

sscmarine
Designers of high efficiency vessels

Client:	EAST BY WEST
Project:	WELLINGTON FERRY
Title:	DECK/CABIN EXTERIOR PLAN/PROFILE
Drawing Number:	SSC - 005/1 - 0202
Sheet:	1 of 1
Scale at ISO A1:	1 : 40
Date:	23 - 06 - 2020

This drawing is confidential. It may not be copied or its contents disclosed to third parties without the written consent of SSC Marine Ltd. and may only be used for the construction of vessels for which design fees and/or royalty payments have been made in accordance with the design contract. All copyrights and intellectual rights remain with SSC Marine Ltd

EXTERIOR PROFILE DECK GEAR

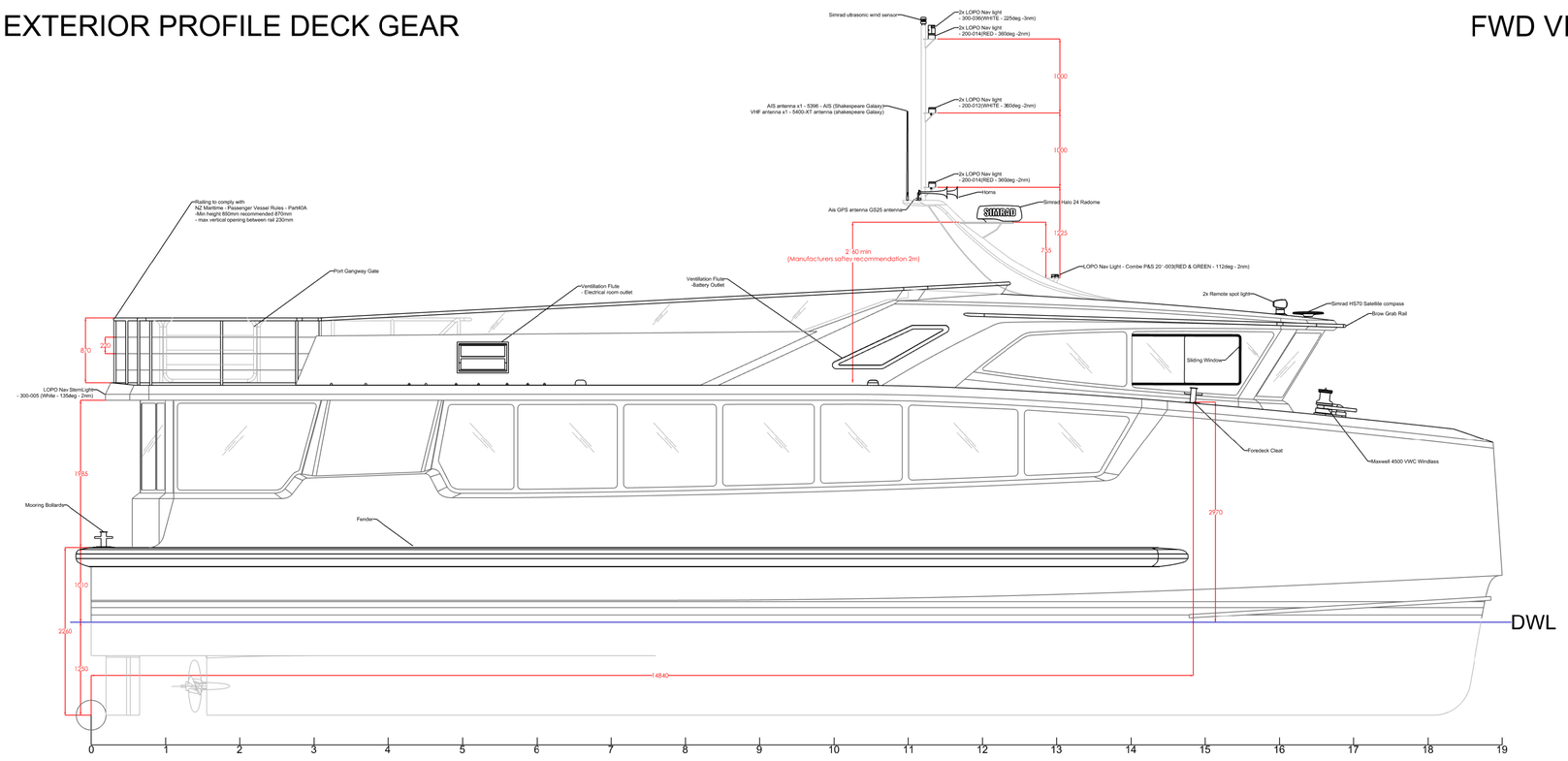

FWD VIEW DECK GEAR

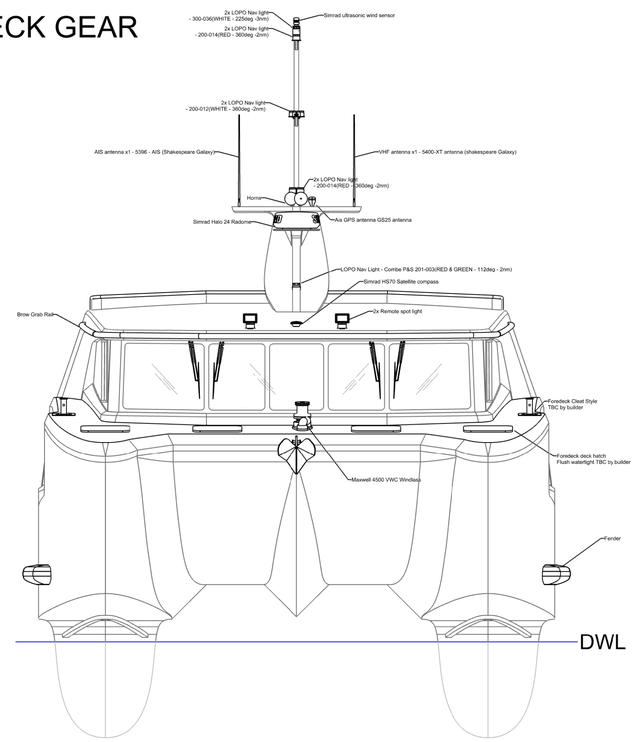

UPPER DECK GEAR

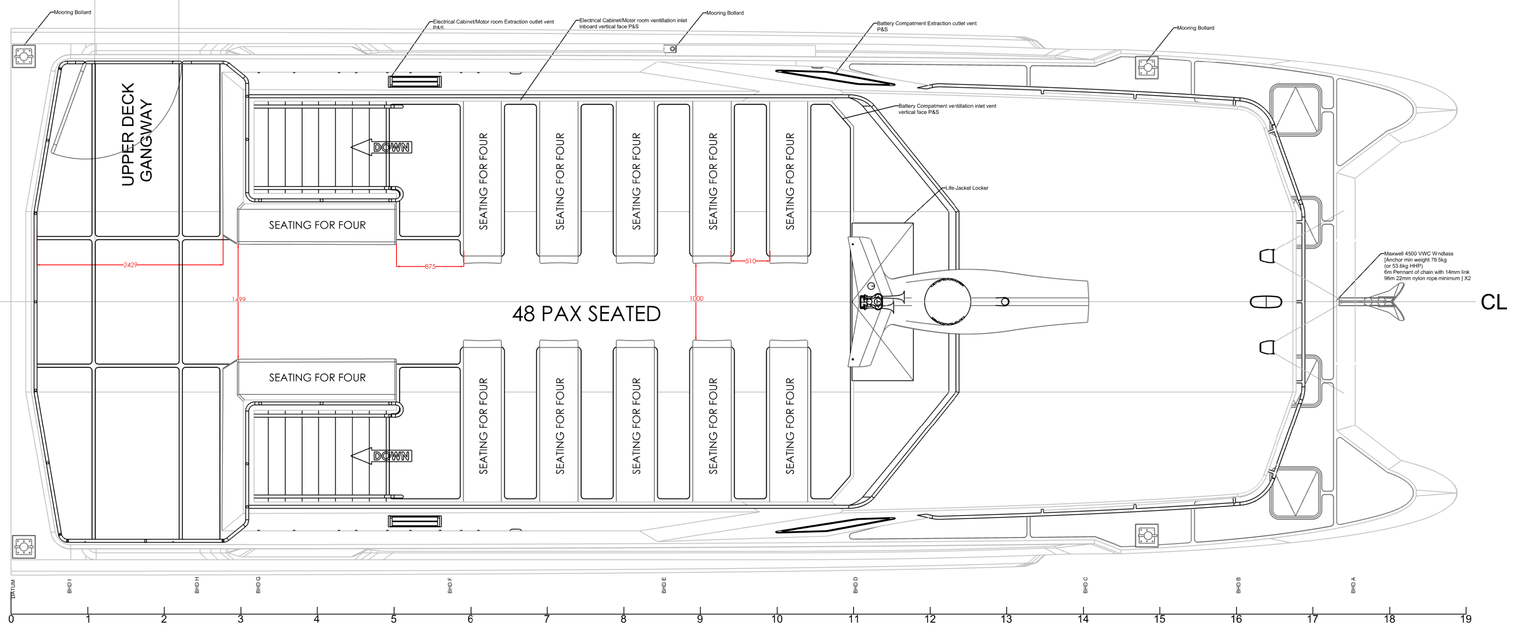

Wellington City Council
21 April 2021

ISSUE	Date	Drawn	Checked	Approved	COMMENTS
P.1	12-12-2018	W.B.	K.C.	K.C.	Hull model version 0.22C - layout adjusted
P.2	01-02-2019	W.B.	K.C.	K.C.	Hull model version 0.30a - Hull adjusted
P.3	15-07-2019	W.B.	K.C.	K.C.	Hull model version 0.30a - GA Finalised
A	23-06-2020	W.B.	K.C.	K.C.	GA and systems finalised

ISSUED FOR DESIGN APPROVAL

sscmarine
Designers of high efficiency vessels

SSC MARINE LTD
5/2 Emily Place, Auckland, 1010
New Zealand
Email: enquiries@sscmarine.com
Web: sscmarine.com

Client:	EAST BY WEST
Project:	WELLINGTON FERRY
Title:	DECK GEAR LAYOUT - UPPER DECK/EXTERIOR
Drawing Number:	SSC - 005/1 - 0301
Sheet:	1 of 2
Scale at ISO A1:	1 : 40
Date:	23 - 06 - 2020

This drawing is confidential. It may not be copied or its contents disclosed to third parties without the written consent of SSC Marine Ltd. and may only be used for the construction of vessels for which design fees and/or royalty payments have been made in accordance with the design contract.
All copyrights and intellectual rights remain with SSC Marine Ltd