Wellington City Council Received:
18/07/2022

PDF created with pdfFactory Pro trial version www.pdffactory.com

P O BOX 60-153, TITIRANGI
AUCKLAND, NEW ZEALAND.
Phone 64 9 817 1988
Fax 64 9 817 6080
e - mail: malcolm@tennantdesign.co.nz

COPYRIGHT:

MALCOLM TENNANT MULTIHULL DESIGN LTD

Wellington City Council
Received: 18/07/2022

MAIN PARAMETERS:

LOA	14.5 m
LWL	13.11 m
BOA	5.2m
Draft [dwl]	1.16 m
Disp [dwl]	11,171 kg
Horsepower	2x191 kw
Cruising speed	20 knots

ELEVATION:

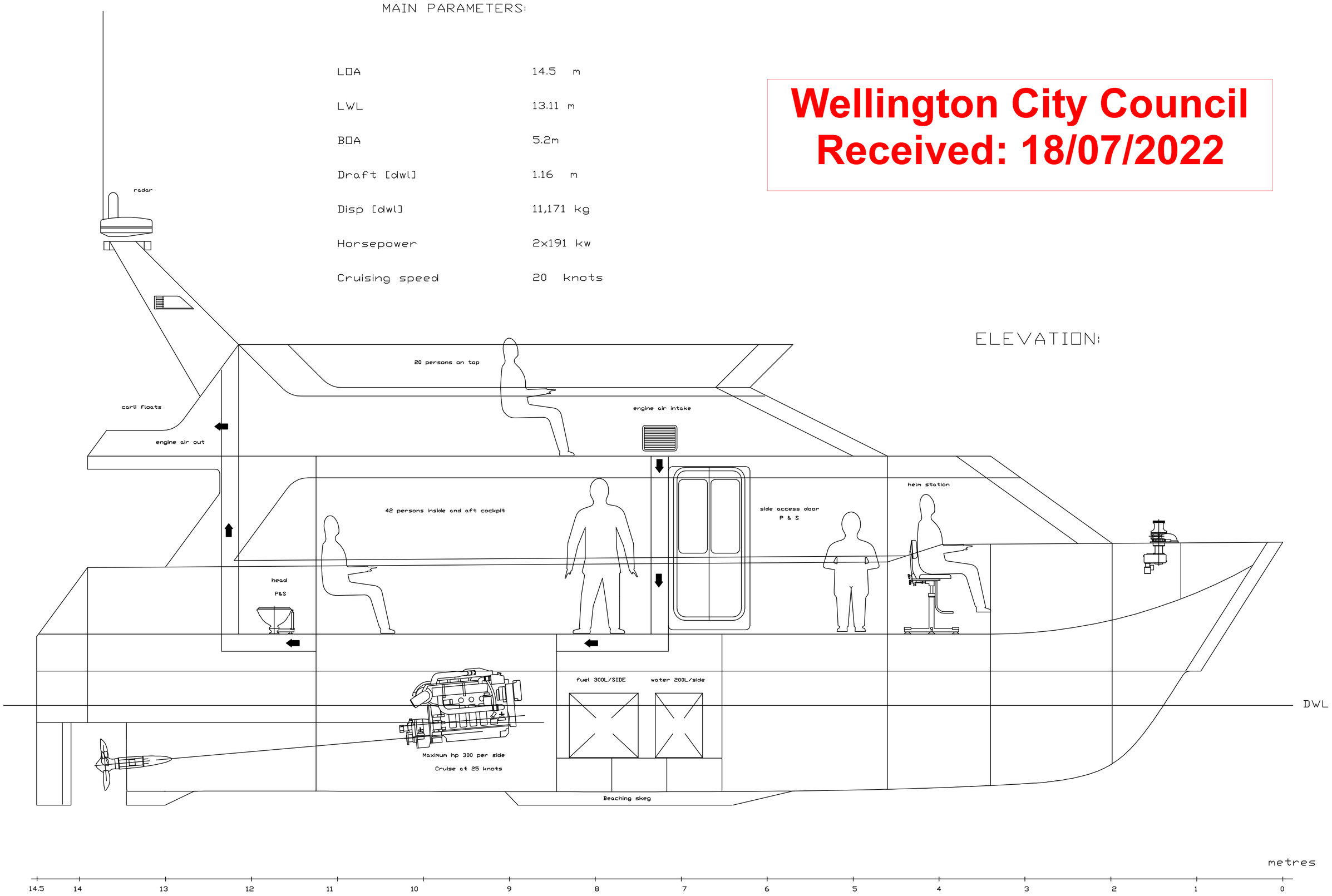

MID-DECK PLAN:

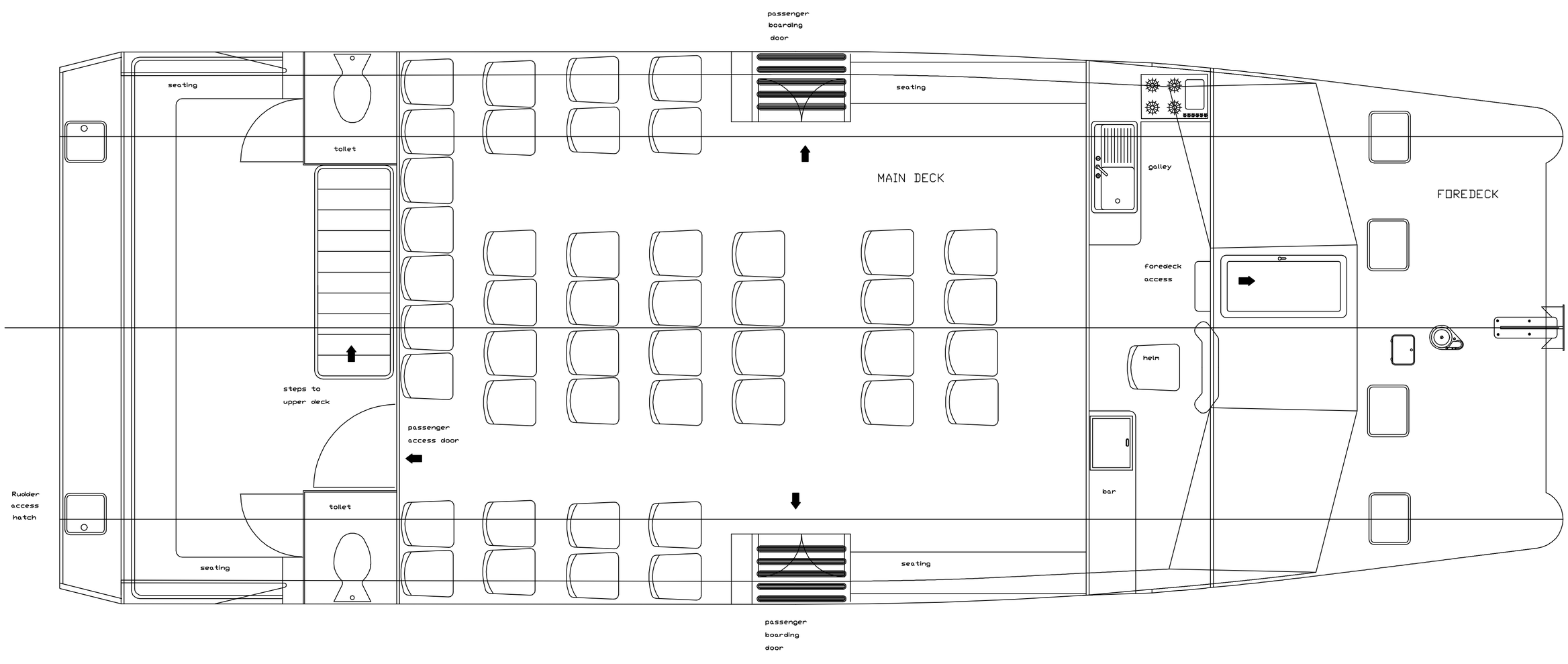

PROJECT: MATAURI

TITLE: FENERAL ARRANGEMENT STUDY PRINT

ALL PROPRIETARY RIGHTS IN DESIGNS CREATED BY MALCOLM TENNANT MULTIHULL DESIGN LTD ARE EXCLUSIVELY OWNED AND RESERVED TO MALCOLM TENNANT MULTIHULL DESIGN LTD.
REPRODUCTION OF DESIGNS AND COPYRIGHT OWNERSHIP OR ANY OTHER PROPRIETARY RIGHTS IN DESIGNS OR ANY DEVIATION, ADOPTION OR VARIATION THEREOF ARE PROHIBITED WITHOUT WRITTEN CONSENT BY MALCOLM TENNANT MULTIHULL DESIGN LTD.

DESIGN:	MALCOLM TENNANT.	DRAWN BY:	MALCOLM TENNANT	SIZE:	A 1
DESIGN NUMBER:	0189	DRAWING NUMBER:	012	FILE NAME:	MSP2
MODIFICATIONS:		DATE:	11th April 1994	SCALE:	1:30

PDF created with pdfFactory Pro trial version www.pdffactory.com

P O BOX 60-153, TITIRANGI
AUCKLAND, NEW ZEALAND.
Phone 64 9 817 1988
Fax 64 9 817 6080
e - mail: malcolm@tennantdesign.co.nz

COPYRIGHT:

MALCOLM TENNANT MULTIHULL DESIGN LTD

MAIN PARAMETERS:

LOA	14.5 m
LWL	13.11 m
BOA	5.2m
Draft [dwl]	1.16 m
Disp [dwl]	11,171 kg
Horsepower	2x191 kw
Cruising speed	20 knots

SECTION:

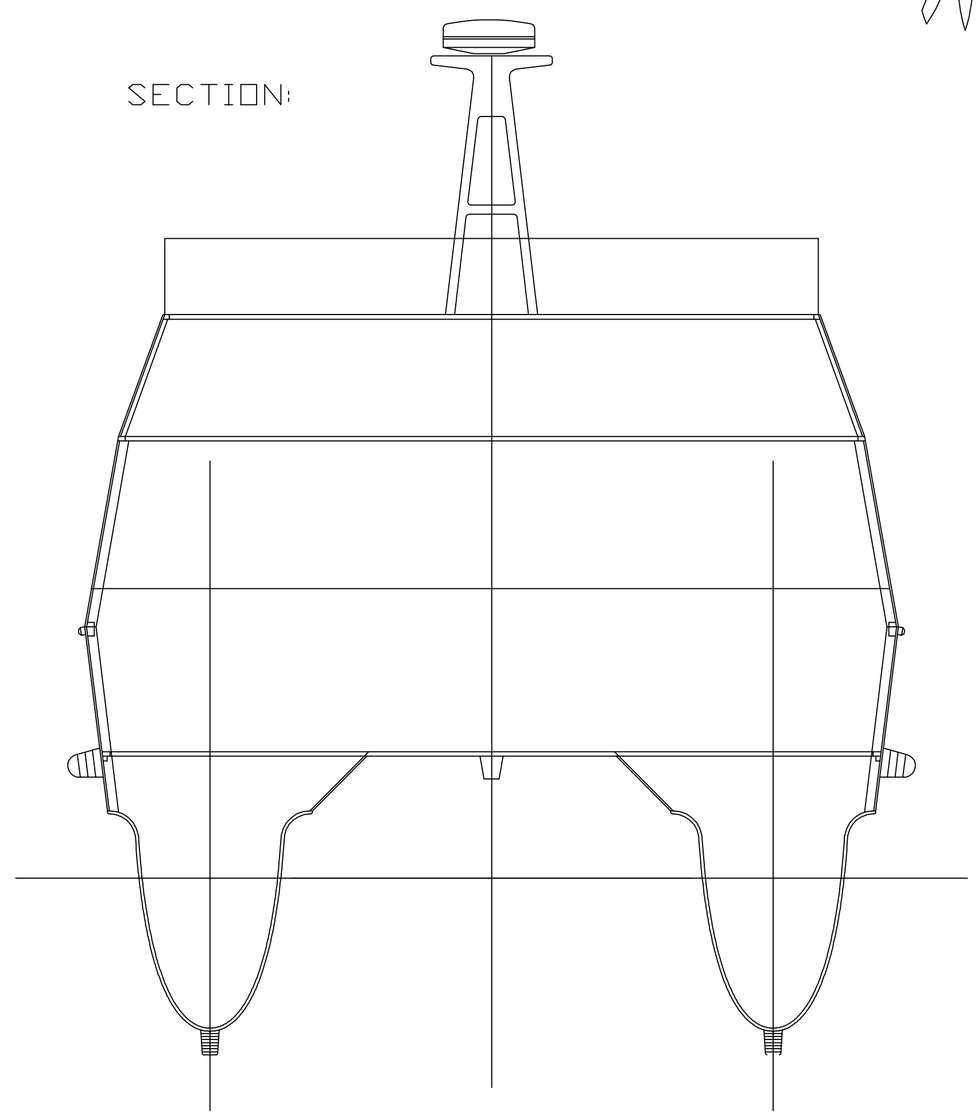

Wellington City Council Received: 18/07/2022

PROFILE:

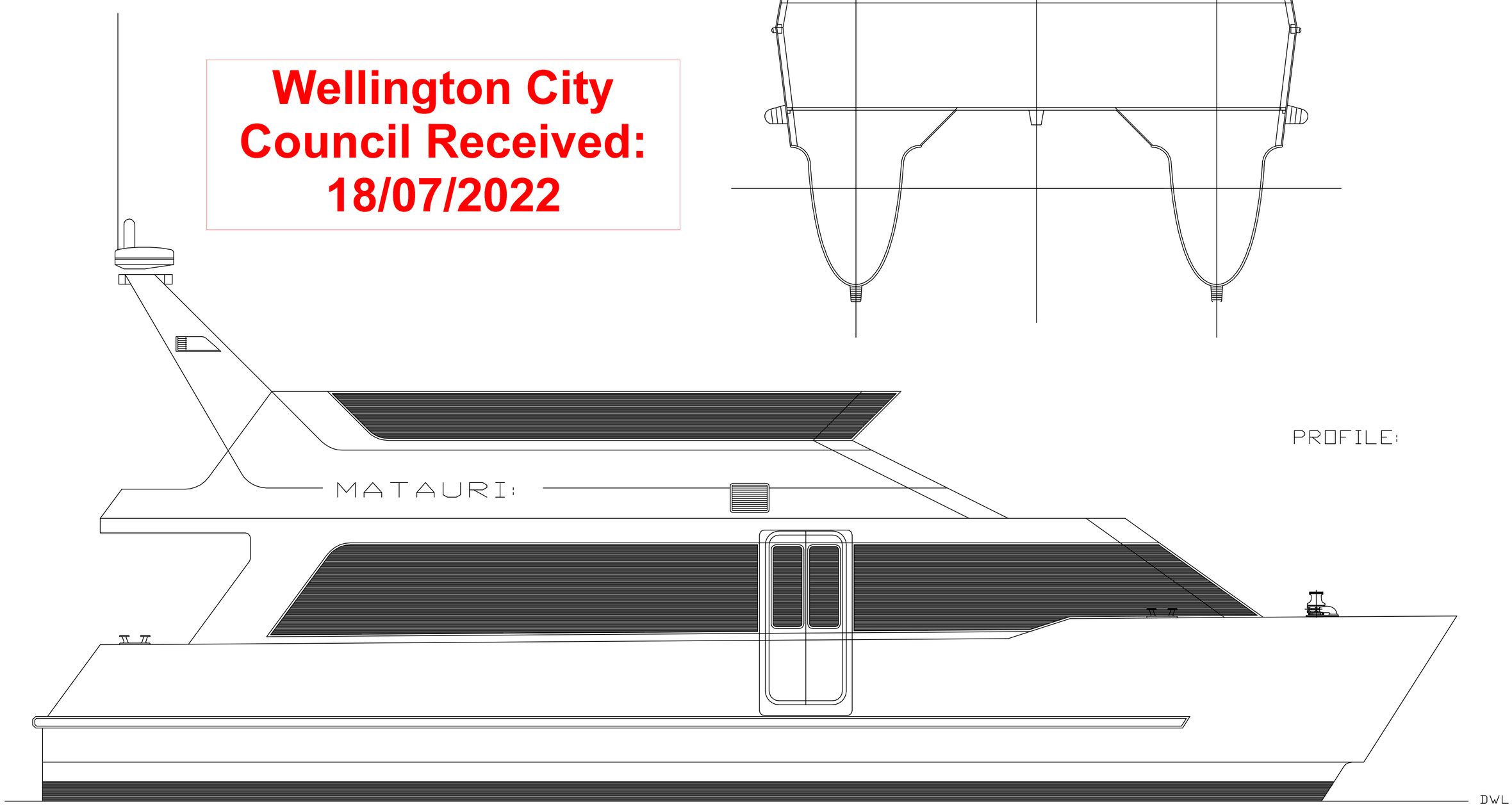

UPPER DECK:

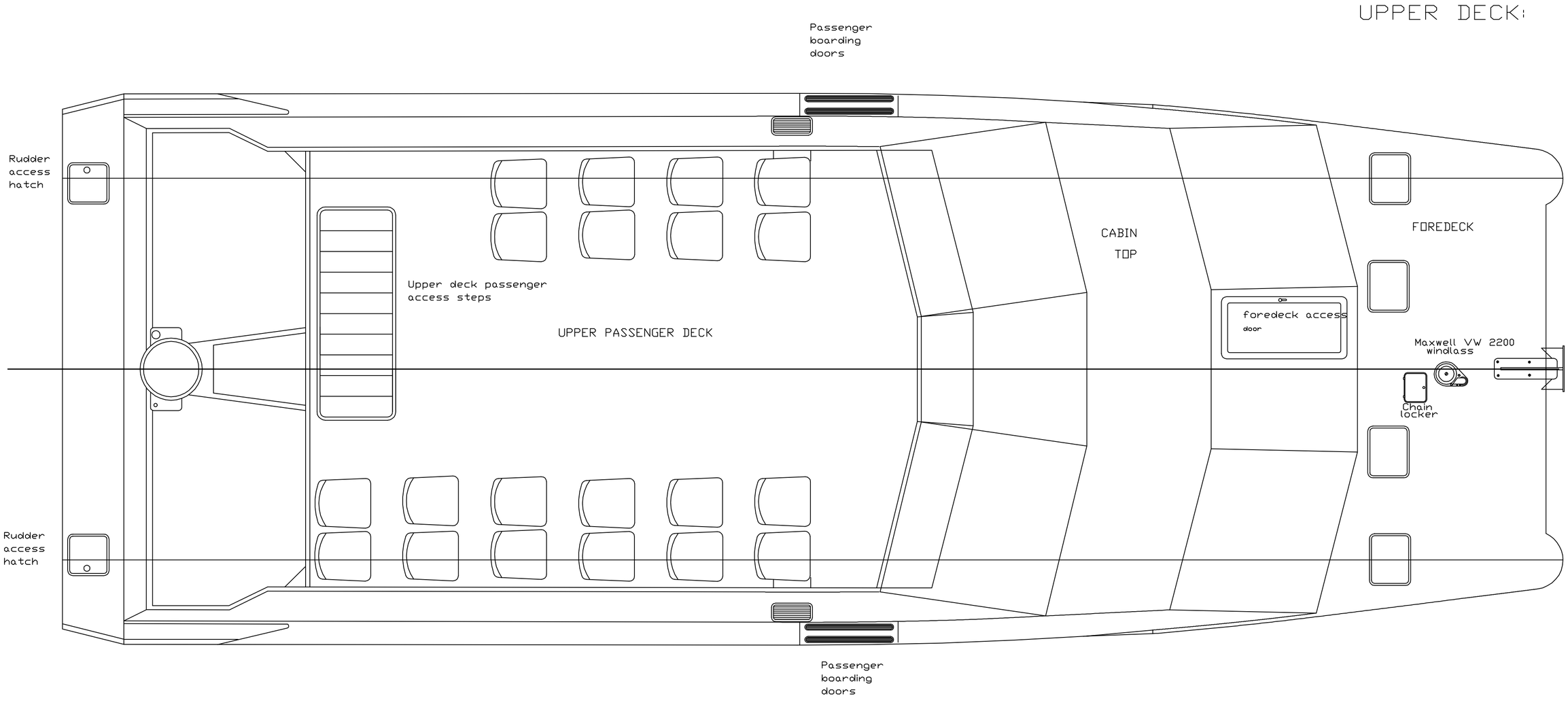

PROJECT:	MATAURI	DESIGN:	MALCOLM TENNANT.	DRAWN BY:	MALCOLM TENNANT
TITLE:	GENERAL ARRANGEMENT STUDY PRINT	DESIGN NUMBER:	0189	DRAWING NUMBER:	001
		MODIFICATIONS:		DATE:	8th April 1994

SIZE: A 1
FILE NAME: MSP1
SCALE: 1:30

ALL PROPRIETARY RIGHTS IN DESIGNS CREATED BY MALCOLM TENNANT MULTIHULL DESIGN LTD ARE EXCLUSIVELY OWNED AND RESERVED TO MALCOLM TENNANT MULTIHULL DESIGN LTD.
REPRODUCTION OF DESIGNS AND COPYRIGHT OWNERSHIP OR ANY OTHER PROPRIETARY RIGHTS IN DESIGNS OR ANY DEVIATION, ADOPTION OR VARIATION THEREOF ARE PROHIBITED WITHOUT WRITTEN CONSENT BY MALCOLM TENNANT MULTIHULL DESIGN LTD.

PDF created with pdfFactory Pro trial version www.pdffactory.com